Julia

1307_70010

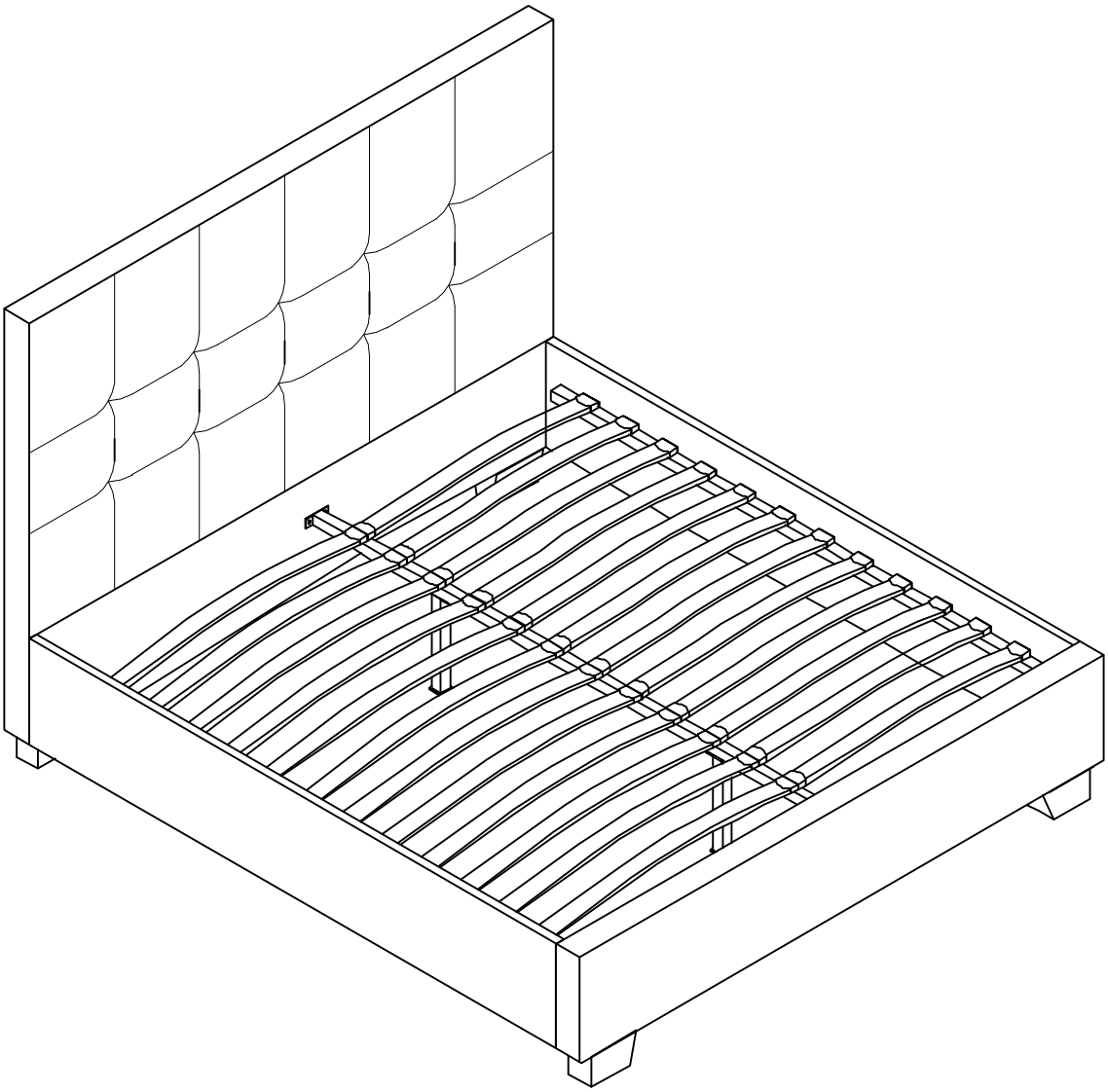

1307_70010

1		x 1	168*8*79 cm	1/2		A	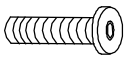	x 4	M8X75mm	2/2
2	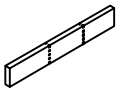	x 1	168*5*18 cm	2/2		B	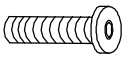	x 8	M8X35mm	2/2
3		x 2	202*2.5*18 cm	2/2		C		x 8	M8X25mm	2/2
4		x 2	20*2.5*2.5 cm	2/2		D		x 4	M8	2/2
5		x 1	202*3*2 cm	2/2		E		x 20		2/2
6		x 26	80.5*5.2*0.9 cm	1/2		F		x 20		2/2
7		x 13		2/2		G		x 1	M8	2/2
8		x 26		2/2		H		x 1		2/2
9		x 4	7*3.2*10 cm	2/2						

FR : SAV/INFORMATION /VIDEO/CONTACT
EN: AFTER-SALES SERVICE/INFORMATION/VIDEO/CONTACT
DE : REPARATUR-SERVICE UND ERSATZTEILE /INFORMATIONEN /VIDEO/KONTAKT
ES: SERVICIO POST-VENTA/INFORMACIÓN/VIDEO/CONTACTO
IT: SERVIZIO ASSISTENZA/INFORMAZIONI/VIDEO/CONTATTO
PT: SERVIÇO PÓS-VENDA/INFORMAÇÕES/VIDEO/CONTATO
PL: SERWIS TECHNICZNY/INFORMACJE/WIDEO/KONTAKT
NE: AFTER SALES SERVICE/INFORMATIE/VIDEO/CONTACT
HE: לאחר שירות ומכירות/מידע /הווידאו/לתקשר עם

SAV.HABITATETJARDIN.COM

1

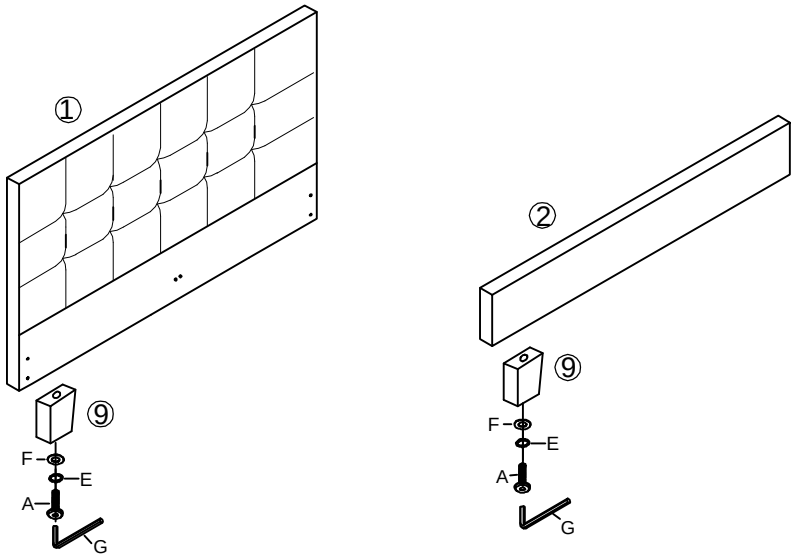
①
②
⑨
F
E
A
G
⑨
F
E
A
G

2

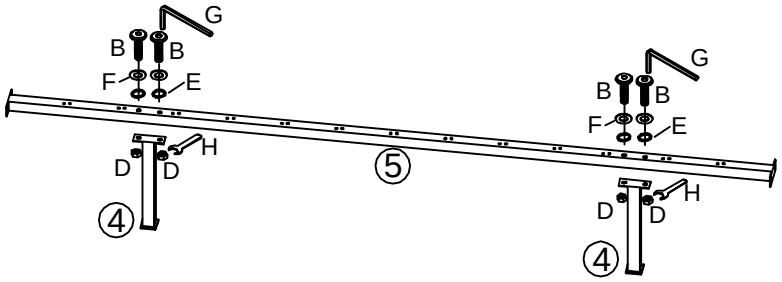
G
B
B
F
E
D
D
H
④
⑤
G
B
B
F
E
D
D
H
④

3

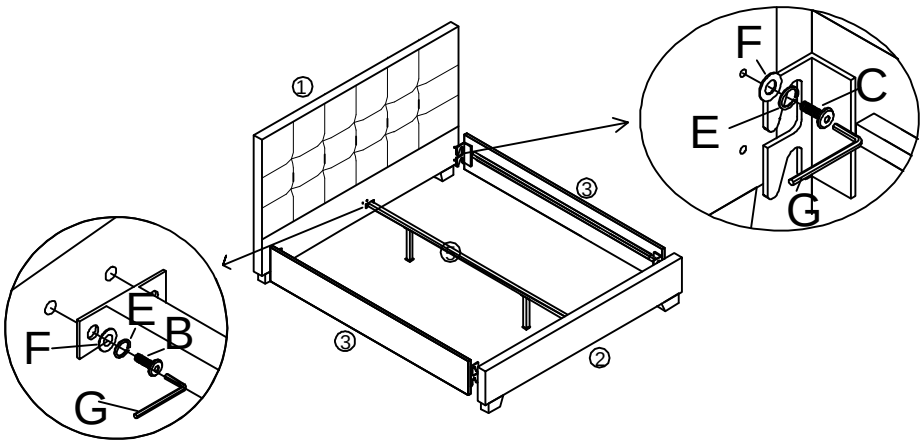
①
③
③
②
F
C
E
G
E
B
F
G

4

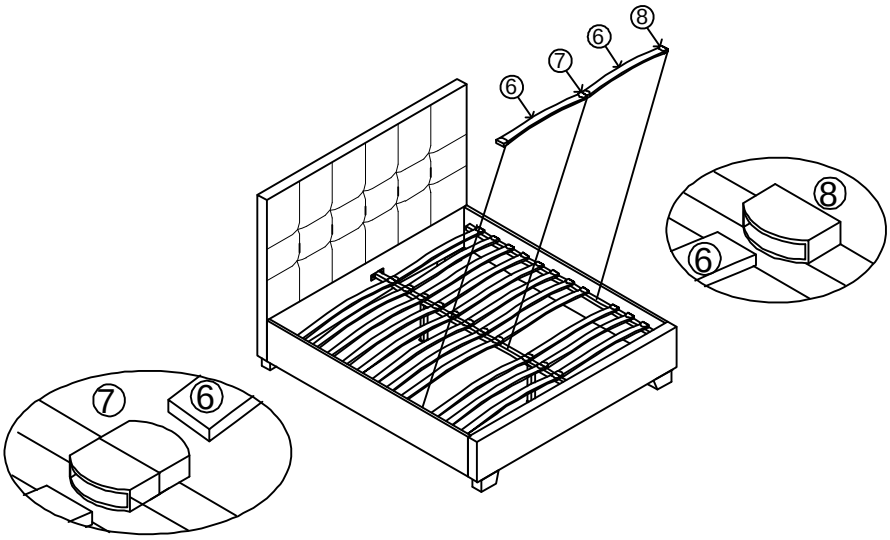
⑧
⑥
⑦
⑥
⑧
⑥
⑦
⑥